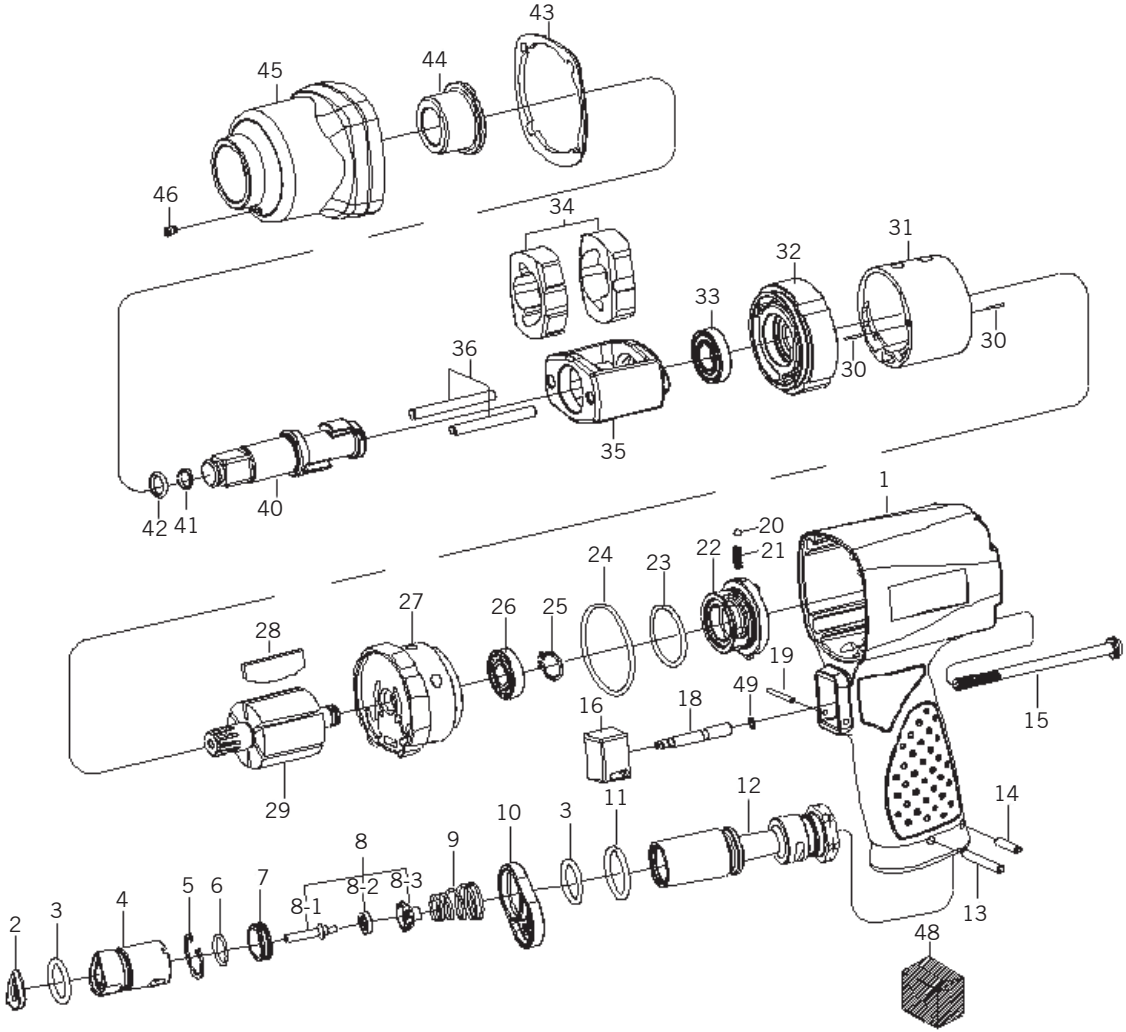
43
44
45
46
34
31
32
33
30
30
36
35
40
42
41
1
20
21
22
24
23
19
27
26
25
28
49
18
16
15
29
11
12
14
10
3
8
9
5
6
7
8-1
8-2
8-3
4
3
2
13
48

ITEM #	PART #	DESCRIPTION	QTY	ITEM #	PART #	DESCRIPTION	QTY
	AWP550BC	1/2" Impact Wrench					
				12	31Y200027	AIR INLET	1
A	**31D100010**	**ANVIL ASSEMBLY**	1	13	31R200087	SPRING PIN	1
40	31D200019	ANVIL	1	14	31R200088	SPRING PIN	1
41	31R200102	O-RING	1	15	31R200089	SCREW	4
42	31R200101	SOCKET RETAINER	1	19	31R200091	SPRING PIN	1
				22	31Y200030	REVERSE VALVE	1
B	**31D100011**	**HAMMER CASE ASSEMBLY**	1	25	31R200096	RETAINER	1
34		HAMMER	2	27	31M200018	REAR END PLATE	1
35		HAMMER FRAME	1	29	31M200020	ROTOR	1
36		HAMMER PIN	2	30	31R200098	SPRING PIN	2
A		ANVIL ASSEMBLY	1	31	31M200021	CYLINDER	1
				32	31M200022	FRONT END PLATE	1
8	**31P100004**	**THROTTLE VALVE ASSEMBLY**	1				
8-1		THROTTLE VALVE PIN	1	TK	**31M100016**	**TUNE UP KIT**	
8-2		RUBBER SEAL	1	3		O-RING	2
8-3		THROTTLE VALVE	1	6		O-RING	1
				9		SPRING	1
16	**31P100001**	**TRIGGER ASSEMBLY**	1	11		O-RING	1
18		TRIGGER PIN	1	20		STEEL BALL	1
				21		SPRING	1
45	**31H100006**	**HAMMER CASE ASSEMBLY**	1	23		O-RING	1
44		BUSHING	1	24		O-RING	1
46		GREASE FITTING	1	26		BALL BEARING	1
				28		ROTOR BLADE	6
				33		BALL BEARING	1
1	31H200004	MOTOR HOUSING	1	41		O-RING	1
2	31R200079	O-RING	1	42		SOCKET RETAINER	1
4	31Y200029	GUIDE TUBE	1	43		GASKET	1
5	31R200081	RETAINER	1	48		MUFFLER ELEMENT	1
7	31Y200024	THROTTLE VALVE SEAT	1	49		O-RING	1
10	31Y200026	EXHAUST DEFLECTOR	1				